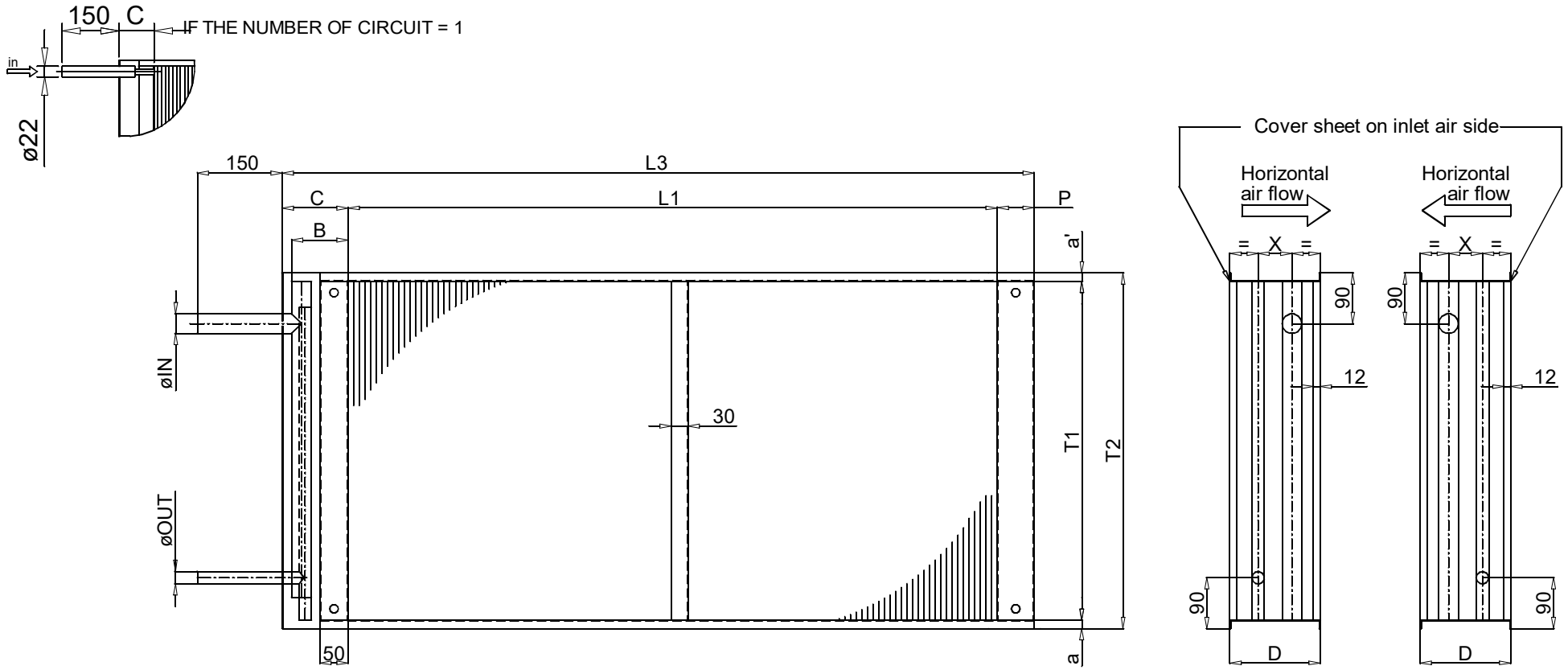


Intermediate plate for coils with:
R = 1 and L1 > = 1500 mm
R > 1 and L1 > = 2000 mm

Top and bottom plates without counterfolds

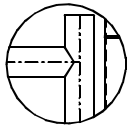

if a+1/2ø connection < 90

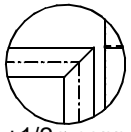

if a+1/2ø connection => 90

| N. | DESCRIPTION | THICKNESS | MATERIAL | NOTES |
|---|---|---|---|---|
| 8 | | | | |
| 7 | | | | |
| 6 | | | | |
| 5 | CONNECTIONS | | Cu-DHP EN 12735-1 | |
| 4 | HEADERS | | Cu-DHP EN 12735-1 | |
| 3 | FRAME | DBM Std. | FeZn - DX51D+Z EN10327 | |
| 2 | FINS | 0.11 | Al-Alloy 8006 | |
| 1 | EXCHANGE TUBES | 0.40 | Cu-DHP EN 12735-2 | |

MATERIALS AND THICKNESS

| REV. | DESCRIPTION | PREP'D | CHK'D | APPR'D | DATE |
|---|---|---|---|---|---|
| 0 | FIRST ISSUE | LP | LP | SB | 09/10/20 |

| OPERATING CONDITION | | |
|---|---|---|
| TUBE SIDE | Pmax | 10 barg |
| | Tmin/Tmax | -10°/100°C |
| FIN SIDE | Pmax | - barg at -°C |
| | Tmin/Tmax | -°--°C at - barg |
| TEST PRESSURE | | 24 barg |
| FILE | | STD.-CONDENSER COILS.dwg |

GENERAL TOLERANCES
ACCORDING TO
DBM-TOL-N-R00

[mm-A3]

| | |
|---|---|
| CUSTOMER | SYSTEMAIR A/S |
| CODE | STANDARD DIMENSION - CONDENSER COILS |
| N. PIECES | INTERNAL FLUID |
| WEIGHT kg | VOLUME |
| ORDER N. | SCALE |
| OFFER N. | DRAWING N. PAGE 1 P40 |
| CONFIRMATION N. | CONDENSER COILS |

IL PRESENTE DISEGNO E' DI PROPRIETA' ESCLUSIVA DELLA DBM S.p.A. ESSO NON PUO' ESSERE USATO, RIPRODOTTO, DISTRIBUITO O ESIBITO SENZA L'ESPRESSO CONSENSO DELLA DBM S.p.A.
THIS DRAWING IS EXCLUSIVE PROPERTY OF DBM S.p.A. IT MUST NOT BE USED, REPRODUCED, DISTRIBUTED OR EXHIBITED WITHOUT EXPRESSED PERMISSION OF DBM S.p.A.

D.B.M. SpA Via U.La Malfa, 10 28040 Varallo Pombia-Novara-ITALY Tel. +39 0321 956794 Fax +39 0321 957266 e-mail: info@dbmcoils.com